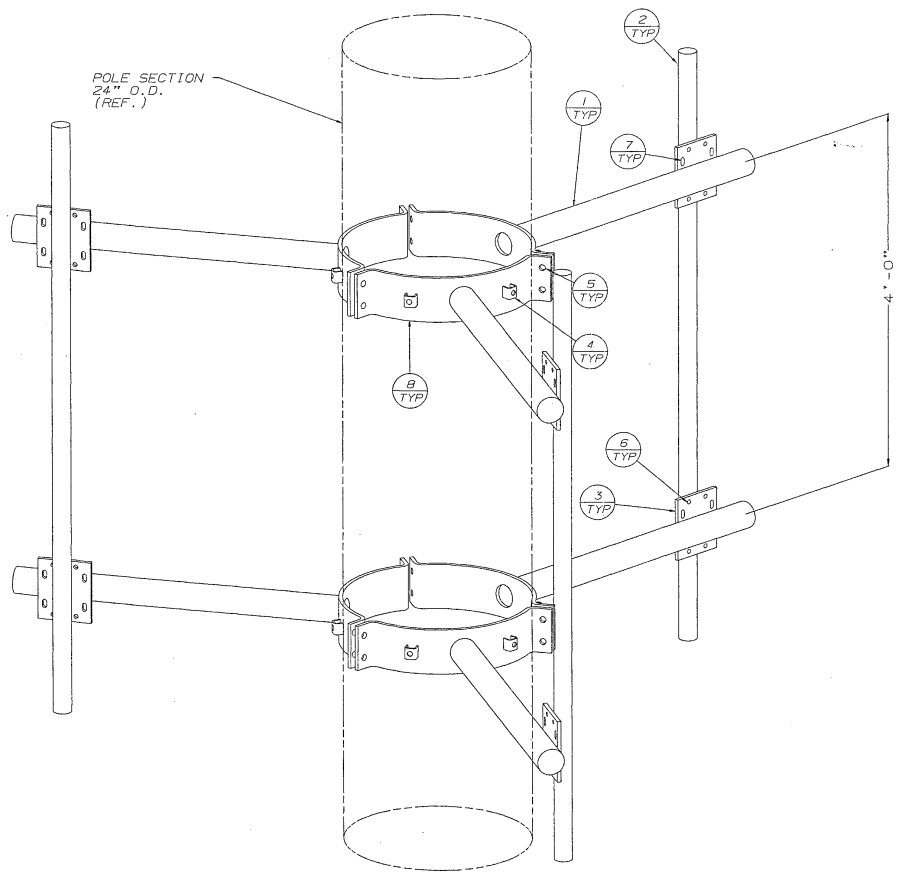

BILL OF MATERIAL

ITEM	QUAN.	QUAN.	QUAN.	PART NO.	DESCRIPTION	DWG. NO.
1	2	4	6	VY4951	SIDE ARM CLAMP	C931023
2	1	2	3	KH1194	MOUNTING PIPE (2EH X 6'-8")	B790909
3	2	4	6	KH1614	MOUNTING PLATE	B810894
4	12	12	12	5/8STEP	STEP BOLTS	N/A
5	12	12	12	2100516A	3/4" X 3" BOLT ASSY.	C770404
6	4	8	12	JR83A	U-BOLT ASSY.	B651028
7	4	8	12	JR88AW	U-BOLT ASSY.	B651028
8	4	2	-----	VY4741	SIDE ARM CLAMP	C921498

VY4953A (3 SIDE ARMS)
VY4953A2 (2 SIDE ARMS)
VY4953A1 (1 SIDE ARM)

GENERAL NOTES

1. WASHERS ARE PROVIDED FOR ALL SLOTTED HOLES.
2. THIS SIDE ARM IS DESIGNED FOR A MAXIMUM THRUST OF 300 LBS.

No. ▲ Revision Description	▲ Date ▲ Rev By ▲ Ckd By ▲ Appd By
THIS DRAWING IS THE PROPERTY OF ROHN. IT IS NOT TO BE REPRODUCED, COPIED OR TRACED IN WHOLE OR IN PART WITHOUT OUR WRITTEN CONSENT.	R O H N

Scale: NONE	By	Date	Title:
Drawn:	JDM	9-7-93	POLE 3' ADJUSTABLE SIDE ARM ASSEMBLY
Checked:	WMH	9/14/93	
App. Eng.:	TS	9-14-93	
App. Sales:	FM	9-21-93	ENG. FILE: DRAWING NO.: D930507