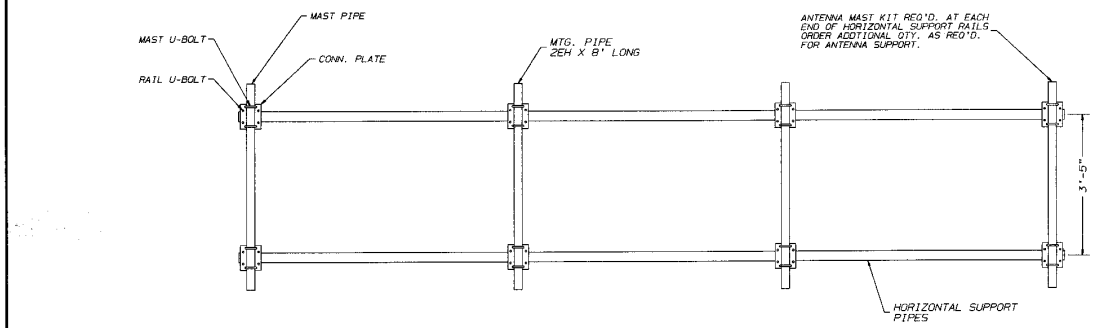

ELEVATION VIEW

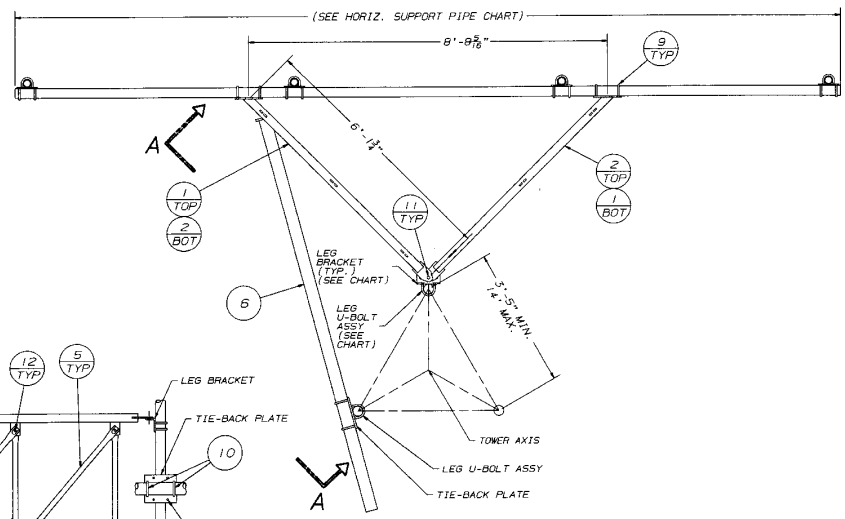

PLAN VIEW

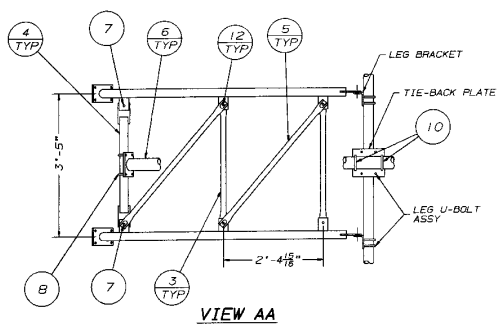

VIEW AA

BILL OF MATERIAL FRAME SUPPORT ASSY.

ASSY P/N: KY1993A1

ITEM	QUAN.	PART NO.	DESCRIPTION	DWG. NO.
1	2	KH4872	BOOM RAIL	C931057
2	2	KH4878	BOOM RAIL	C931057
3	4	KB36R	VERTICAL BRACE	B660719
4	2	KH4875	VERTICAL BRACE	B932380
5	4	KB35R	DIAGONAL BRACE	B660719
6	1	KY12	TIE-BACK	C740106
7	4	210019GA	1/2 X 1-3/4 BOLT ASSY	C770404
8	2	JR83A	U-BOLT ASSY	B651028
9	8	JR84A	U-BOLT ASSY	B651028
10	2	JR88A	U-BOLT ASSY FOR KY12 (TIE-BACK TUBE)	B651028
11	2	210049GA	3/4 X 2-1/2 BOLT ASSY	C770404
12	8	210018GA	1/2 X 1-1/2 BOLT ASSY	C770404

HORIZONTAL SUPPORT PIPES

P/N	PIPE LENGTH	QTY OF (2) PER MOUNT
KH366	12'	2
KH294	13'	2
KH2802	14'	2
KH300	15'	2
KH2803	16'	2
KH4812	17'	2
KH2804	18'	2
KH4813	20'	2

BILL OF MATERIAL LEG MOUNT KIT ASSY

ASSY P/N	LEG SIZE	UPPER LEG BRKT (1 REQ'D) IF TAPERED	LEG BRACKET 2 REQ'D. IF STRAIGHT	TIE-BACK PLATE 1 REQ'D.	LEG U-BOLT	NUTS & WASHERS
STM254A	2.875 - 4.50 O.D.	VY4379	VY4380	KH4750	6-JR84 6-JR88 6-JR89 6-JR85	
STM56A	5.50 - 6.63 O.D.	VY4381	VY4382	KH4751	6-JR86 6-JR87	12 - 250011G 12 - 230013 12 - 230011
STM08A	8.75 O.D.	VY4544	VY4545	KH4752	6-JR90S	
STM10A	10.75 O.D.	VY5179	VY5177	KH4753	6-JR110	
STM12A	12.75 O.D.	VY5650	VY5649	KH4754	6-JR120	

* KIT ORDERING INFORMATION

EXAMPLE: (1) LMF — A —

- QTY OF VY4935AB (MIN - QTY OF 6)
- 254 FOR 2.5"-4" LEG
  56 FOR 5"-6" LEG
  08 FOR 8" LEG
  10 FOR 10" LEG
  12 FOR 12" LEG
- SUPPORT PIPE LENGTH

* KIT INCLUDES

3 - KY1993A1
3 - LEG MTG. KITS
(SEE EXAMPLE) - VY4935AB
6 - SUPPORT PIPES

NOTE: (2 MIN. PER FRAME) ANT. MAST KIT ADDITIONAL QTY. AS REQ'D TO SUPPORT ANTENNAS.

FABRICATION DRAWINGS (FOR SHOP USE ONLY)

B931382, C901349, C901352, C911643

ANTENNA MAST KITS

	QTY.	VY4935AB 2EH X 8'
(MAST PIPE)	1	KH2229
(CONN. PLATE)	2	KY1980
(MAST U-BOLT ASSY)	4	JR83A
(RAIL U-BOLT ASSY)	4	JR84A

GENERAL NOTES

1. FLAT WASHERS PROVIDED FOR ALL SLOTTED HOLES.
2. PAL NUTS PROVIDED FOR ALL BOLT AND U-BOLT ASSY.
3. IT MAY BE NECESSARY TO FIELD CUT TIE-BACK TUBES AFTER INSTALLATION. (ALL FIELD CUTTING MUST BE REPAIRED WITH COLD GALV OR ZINC RICH PAINT.

No. ▲ Revision Description	▲ Date ▲ Rev By ▲ Ckd By ▲ Appd By

THIS DRAWING IS THE PROPERTY OF ROHN. IT IS NOT TO BE REPRODUCED, COPIED OR TRACED IN WHOLE OR IN PART WITHOUT OUR WRITTEN CONSENT.

ROHN

Scale: NONE	By	Date	Title:
Drawn:	JDM	2-10-99	ANTENNA MOUNT ASSY ON 6' GATE BOOMS FOR STR. & TAP. SECTIONS
Checked:	[illegible]	2-11-99	
App. Eng.:	[illegible]	2-11-99	
App. Sales:			ENG. FILE: DRAWING NO.: D990719